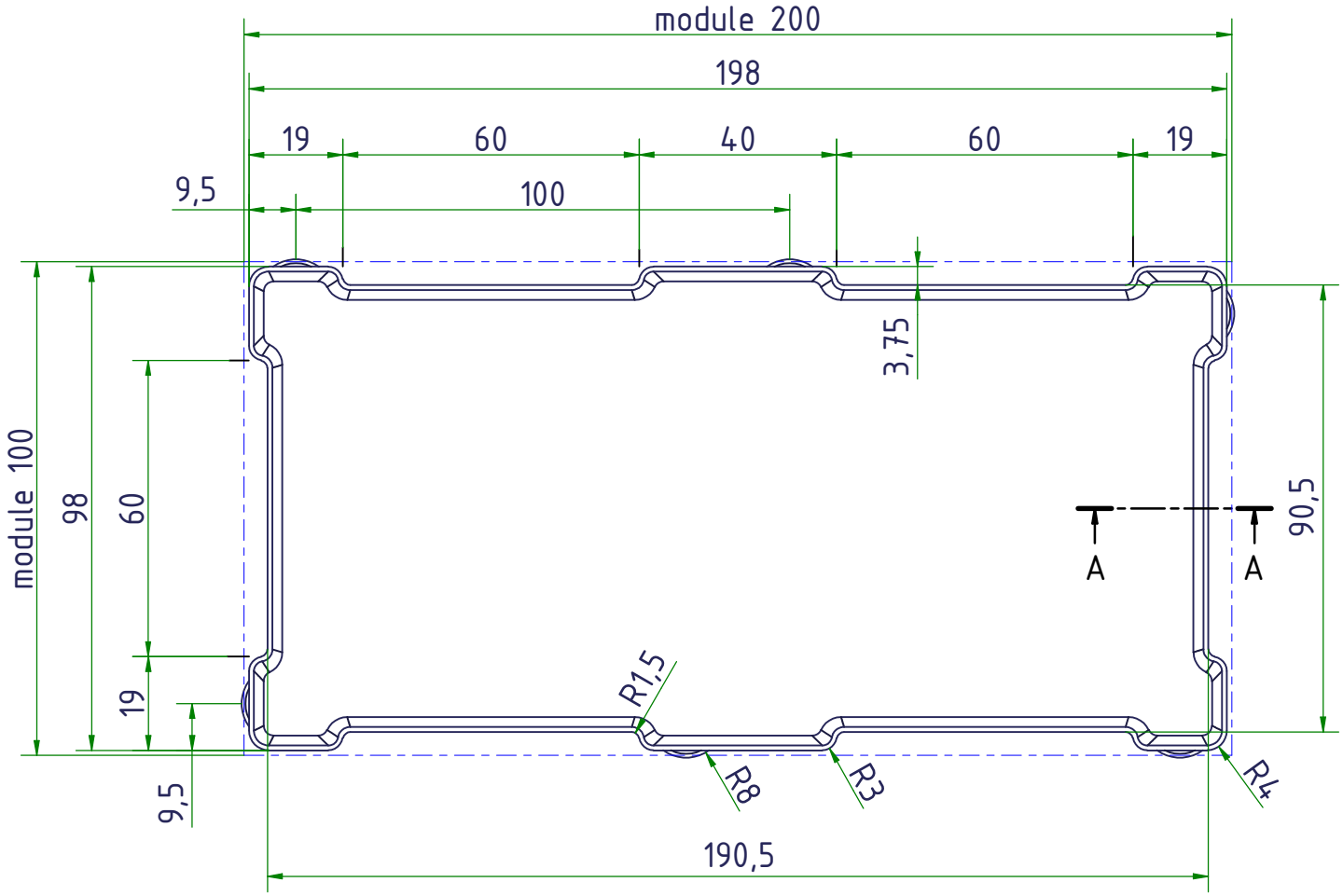

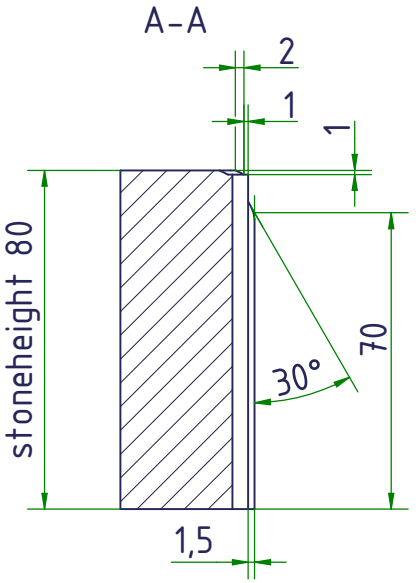

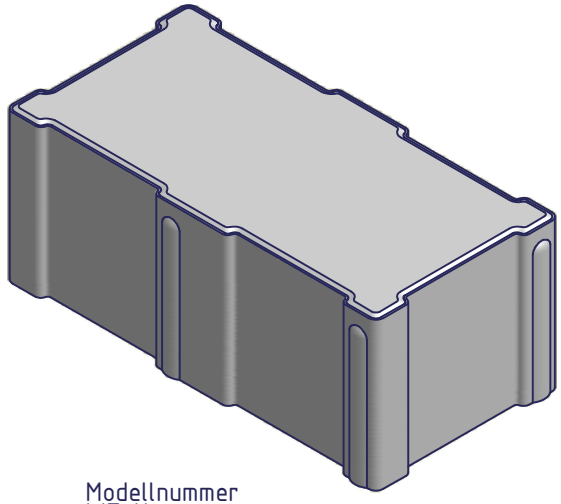

Square footage stone: 180,819 cm2 / 0,1950 ft2
Square footage module: 200,000 cm2 / 0,2156 ft2
Permeability: 9,6%

surface: 180,82 cm^2
volume: 0,051 ft^3

Modellnummer
WZ-Nr.
DP-Nr.

Kunde				Maschine	ERP-Artikel	DXF-L. Menge -
Werk				Brett	Zuschnitt : Norm :	Verfahren :
Auftragsnummer				Datum / Name	ADA Permeable Paver 198x98x80	
				Bearb. 10.01.06 Fuchs	chamfer (2+1)x1 spacers 1,5mm blind	
				Gepr. GO		
				Gepr. A		
B	Steinmass geaendert	23.01.2008	Noetsch	KOBRA	10.1310612.00002.IDW1	Ver. 3
A	Nockenhoehe	22.01.2008	Noetsch			
Zust.	Änderung	Datum	Name	EDV Nr. 10_1310612_00002_IPT1.ipt	org. Artikelnr.: 10.1310616.00011	

According to General terms and conditions KOBRA is not responsible for any infringements of protected rights and third party claims of shown designs and therefore delivered products.